Wiring Diagram

Powerstock Calorifiers and Storage Tanks
Controller Schematics

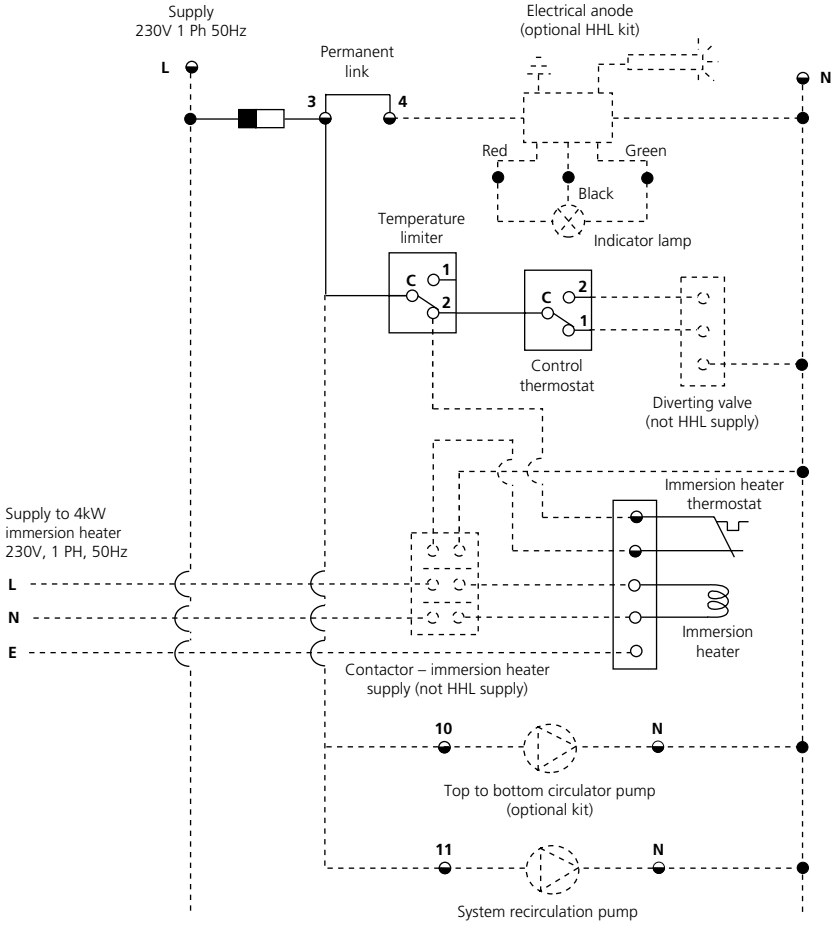

Notes: An uninterrupted permanent power supply is required for electrical anode applications.
Wiring connections from terminal 3 to terminals 10 and 11 should be made using suitably rated cable. If an optional immersion heater is fitted, a separate power supply and connection via the temperature limiter must be provided.

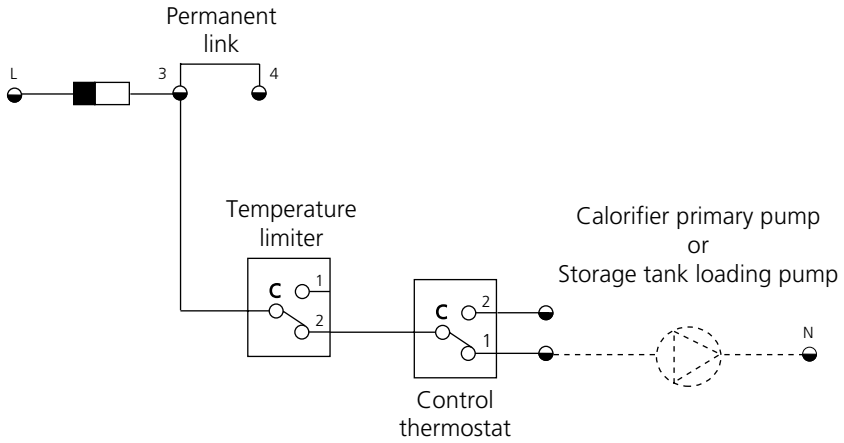

Note: All other wiring should be in accordance with the general wiring diagram.